SL20C venetian and SL20C pleated

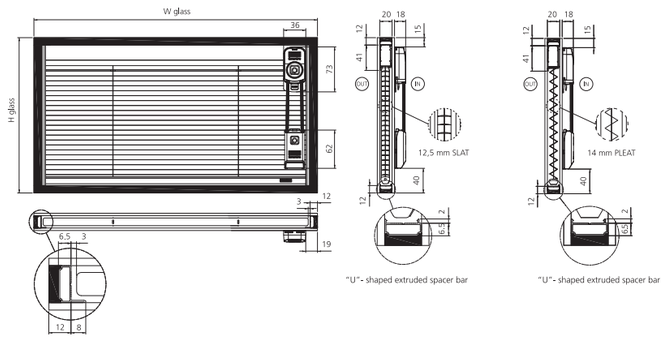

SL20S pleated

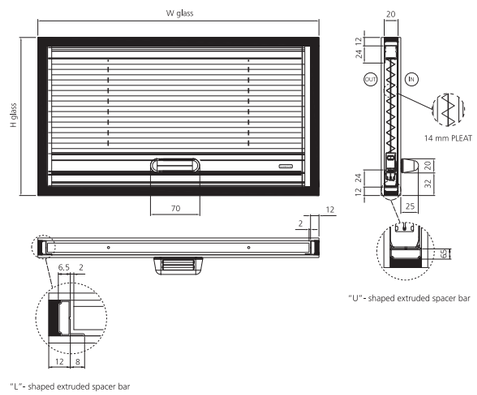

Colours

Venetian blind colours

S102	S149	S157	S106	S125	S130	S142	S155	S156
white	cream	silver	light yellow	beige	light green	light blue	light grey	metallic silver

Pleated blind colours

C000	C010
white	cream

Opaque

Optional colours - silver metallised outside

000	936	741	773	441	386
grey	dark grey	beige	brown	green	blue

Transparent - Semitransparent - Opaque fabric
with silver coloured coating on outside (high performance)

Blind System

Residential Double Glazing
Blind System

Please contact us for further information:
KJM Group Ltd - 9 Mylen Business Centre, Andover, Hampshire, SP10 3HR
Tel: 01264 359355 Fax: 01264 353441 E-mail: sales@kjmgroup.co.uk Web: www.kjmgroup.co.uk

Realisations

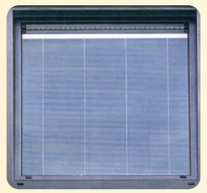

Feasibility Tables

Venetian Blind

Height cm \ Width cm	30	35	40	45	50	55	60	65	70	75	80	85	90	95	100
30	H	H	H	H	H	H	H	H	H	H	H	H	H	H	H
40	H	H	H	H	H	H	H	H	H	H	H	H	H	H	H
50	H	H	H	H	H	H	H	H	H	H	H	H	H	H	H
60	H	H	H	H	H	H	H	H	H	H	H	H	H	H	H
70	H	H	H	H	H	H	H	H	H	H	H	H	H	H	H
80	H	H	H	H	H	H	H	H	H	H	H	H	H	H	S
90	H	H	H	H	H	H	H	H	H	H	H	H	H	S	S
100		H	H	H	H	H	H	H	H	H	H	H	S	S	S
110		H	H	H	H	H	H	H	H	H	S	S	S	S	S
120		H	H	H	H	H	H	H	H	S	S	S	S	S	S
130		H	H	H	H	H	H	H	S	S	S	S	S	S	S
140		H	H	H	H	H	H	S	S	S	S	S	S	S	S
150		H	H	H	H	H	H	S	S	S	S	S	S	S	S
160			H	H	H	H	H	S	S	S	S	S	S	S	S
170			H	H	H	H	S	S	S	S	S	S	S	S	S
180			H	H	H	S	S	S	S	S	S	S	S	S	S
190			H	H	H	S	S	S	S	S	S	S	S	S	S
200			H	H	S	S	S	S	S	S	S	S	S	S	S

H High Speed S Standard Speed

Pleated Blind

Height cm \ Width cm	30	35	40	45	50	55	60	65	70	75	80	85	90	95	100
30	H	H	H	H	H	H	H	H	H	H	H	H	H	H	H
40	H	H	H	H	H	H	H	H	H	H	H	H	H	H	H
50	H	H	H	H	H	H	H	H	H	H	H	H	H	H	H
60	H	H	H	H	H	H	H	H	H	H	H	H	H	H	H
70	H	H	H	H	H	H	H	H	H	H	H	H	H	H	H
80	H	H	H	H	H	H	H	H	H	H	H	H	H	H	H
90	H	H	H	H	H	H	H	H	H	H	H	H	H	H	H
100		H	H	H	H	H	H	H	H	H	H	H	H	H	H
110		H	H	H	H	H	H	H	H	H	H	H	H	H	H
120		H	H	H	H	H	H	H	H	H	H	H	H	H	H
130		H	H	H	H	H	H	H	H	H	H	H	H	H	H
140		H	H	H	H	H	H	H	H	H	H	H	H	H	H
150		H	H	H	H	H	H	H	H	H	H	H	H	H	H
160			H	H	H	H	H	H	H	H	H	H	H	H	H
170			H	H	H	H	H	H	H	H	H	H	H	H	H
180			H	H	H	H	H	H	H	H	H	H	H	H	H
190			H	H	H	H	H	H	H	H	H	H	H	H	H
200			H	H	H	H	H	H	H	H	H	H	H	H	H

H High Speed

Benefits

- Manually operated for precise control
- Blinds can be raised or lowered to suit the weather conditions
- Blinds can be tilted to regulate precisely the level of light and heat entering the home
- Unbeatable protection against glare and build - up of heat
- Cannot get dirty or dusty
- Slats cannot be damaged
- Provides complete privacy
- Can be combined with a range of toughened / high performance glasses
- Choice of 9 coloured slats / 8 pleated fabrics (see colour charts)

Operation

Manual operation with continuous cord loop Motorised - with remote control on request

Applications

- Suitable for all vertical window applications
- Ideal for conservatories, kitchens and bathrooms as well as folding / sliding door systems

Features

width (mm) height (mm)

300 - 1.000 300 - 2.000

4 mm internal glass only

Sizes outside above dimensions available on request

Solar shading properties

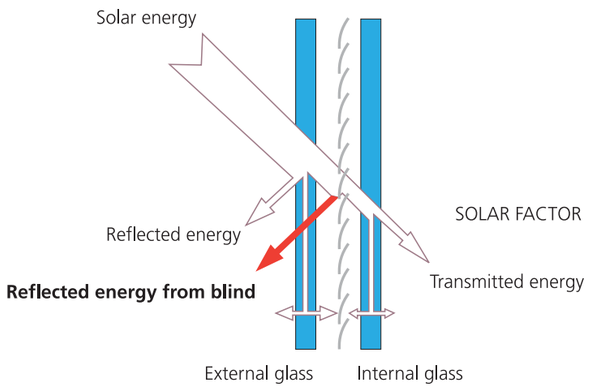

A double glazing unit with an integrated ScreenLine® blind is an excellent screen against solar radiation and offers the possibility to quickly and easily adjust the internal environmental lighting level. Due to the glass transparency, the use of normal double glazing units is often not enough to guarantee correct control of solar energy.

A ScreenLine® integrated system, on the contrary, filters the light transmission and affects its value by the tilting of the slats (in case of venetian blinds) or by lowering the blind (in case of pleated blinds). The heat and visual comfort are improved according to the various seasons.

Please contact us for further information: KJM Group Ltd - 9 Mylen Business Centre, Andover, SP10 3HR Tel: 01264 359355 Fax: 01264 353441 E-mail: sales@kjmgroup.co.uk wwww.kjmgroup.co.uk